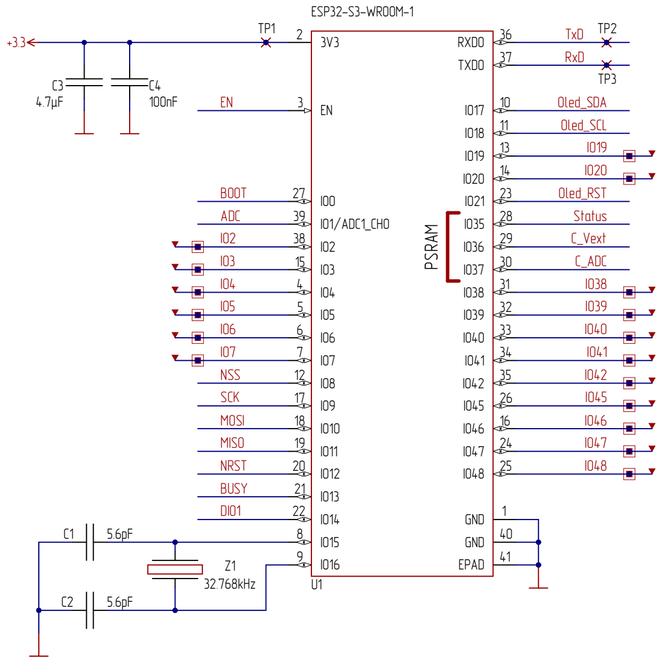

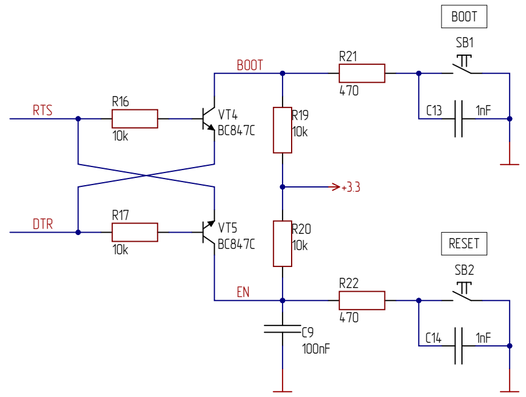

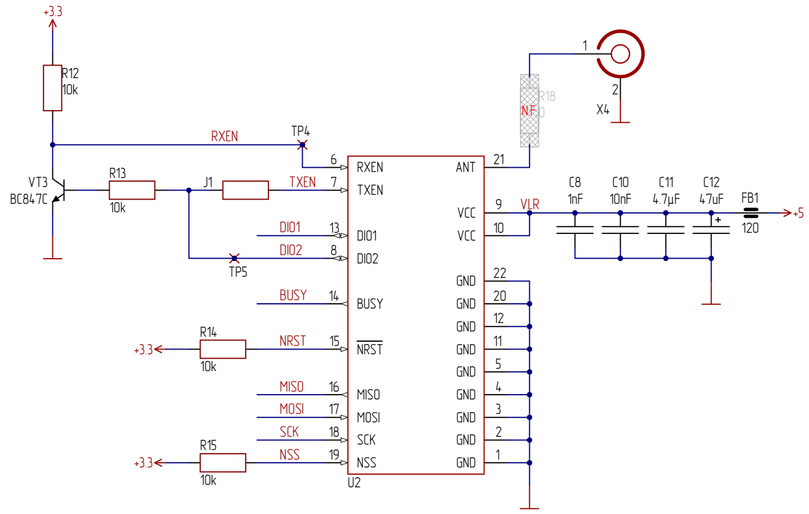

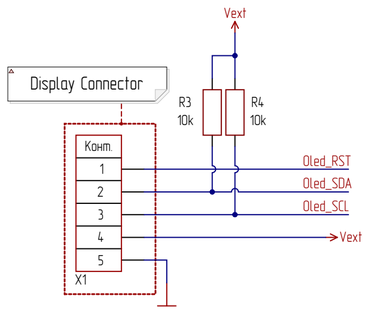

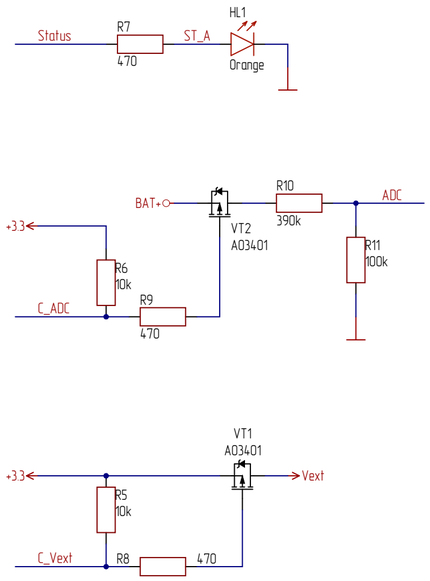

	Module	Chip	MHz	dBm	PWR	VT3	R13	J1
1	E22-170M30S	SX1262	150.125-170.125		1W	+	+	+
2	E22-170M33S	SX1262	150.125-170.125		2W	+	+	+
3	E22-400M30S	SX1262	410-493	-149-151	1W	+	+	+
4	E22-400M33S	SX1262	410-493	-124-126	2W	+	+	+
5	E22-900M30S	SX1262	850-930	-149-151	1W	+	+	+
6	E22-900M33S	SX1262	850-930	-134-136	2W	+	+	+
7	E22P-868M30S	SX1262	863.3-873.3		1W	–	–	+
8	E22P-915M30S	SX1262	902-928		1W	–	–	+
9	E220-400M30S	LLCC68	410-493	-121-129	1W	+	+	+
10	E220-400M33S	LLCC68	410-493	-121-129	2W	+	+	+
11	E220-900M30S	LLCC68	850-930	-121-129	1W	+	+	+
12	E30-400M30S	SI4438	425-525	-120-122	1W	?	?	?
13	E30-400M30S	SI4463	425-525	-120-122	1W	?	?	?
14	E30-900M30S	SI4463	855-950	-120-122	1W	?	?	?
15	E32-400M30S	SX1278	410-493	-123-125	1W	?	?	?
16	E32-400M33S	SX1278	410-493	-123-125	2W	?	?	?
17	E32-900M30S	SX1276	850-931	-123-125	1W	?	?	?

Attention: E22-900M33S, The power setting is maximum 8 dBm to obtain 33 dBm. 7dBm is recommended

MTL 01-01	
Sheet	1 of 3
Sheet Title	MAIN.SchDoc
Variant	Variant 1 with battery

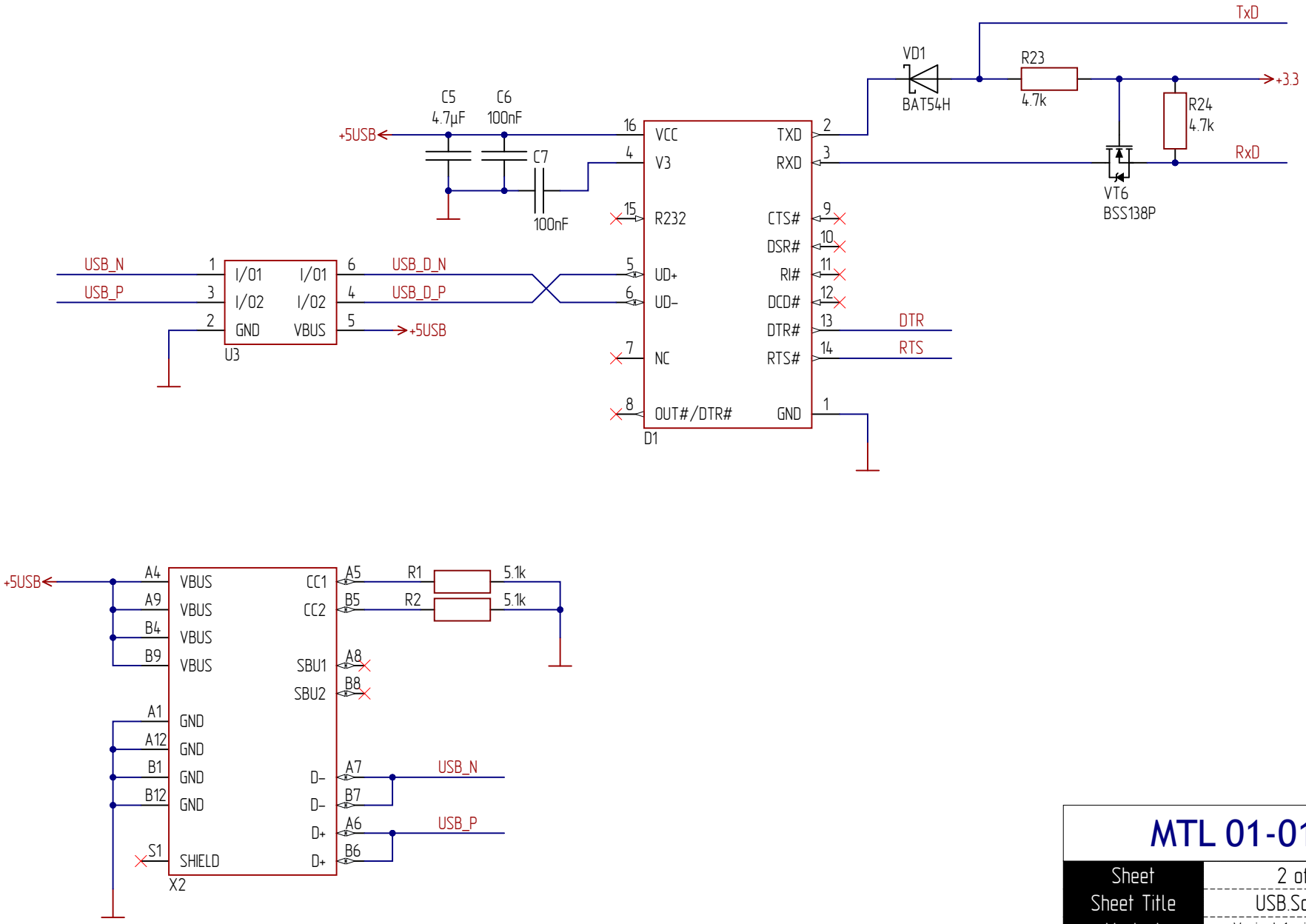

MTL 01-01	
Sheet	2 of 3
Sheet Title	USB.SchDoc
Variant	Variant 1 with battery

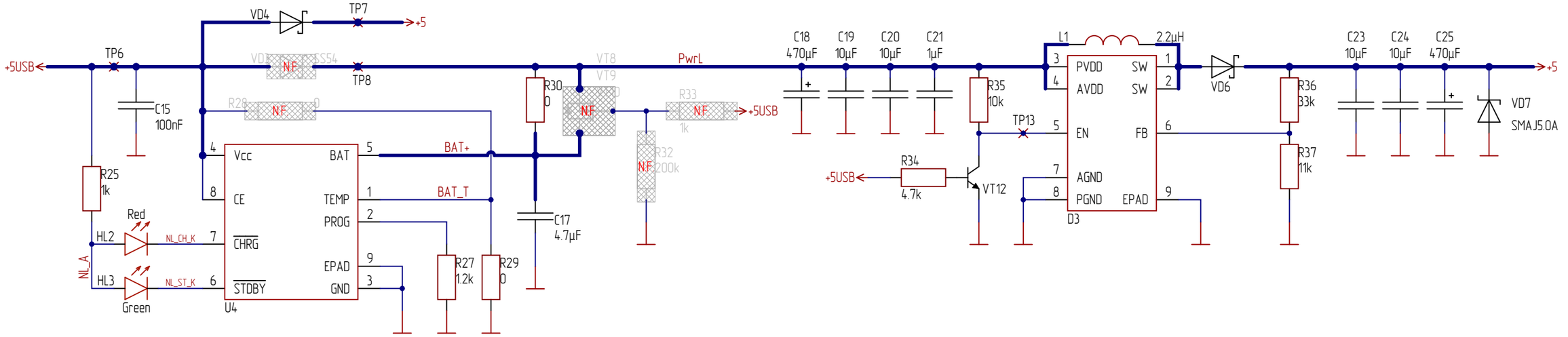

Цепь	Конт.
GND	1
5V	2
GND	3
5V	4

X5

Цепь	Конт.
Bat +	1
Bat t	2
GND	3
GND	4

X6

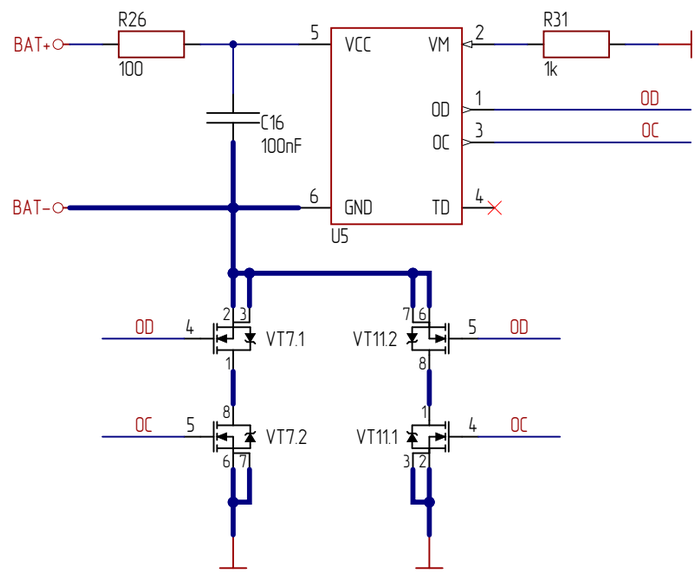

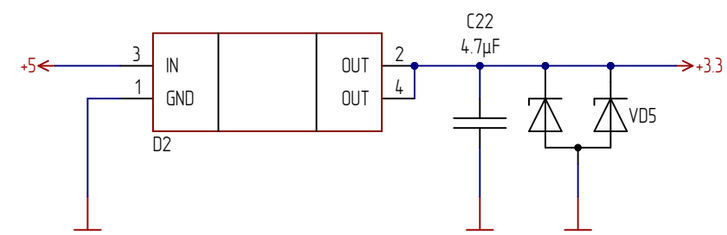

MTL 01-01

Sheet	3 of 3
Sheet Title	POWER.SchDoc
Variant	Variant 1 with battery